ASSEMBLY INSTRUCTIONS
10.AC.1089.1

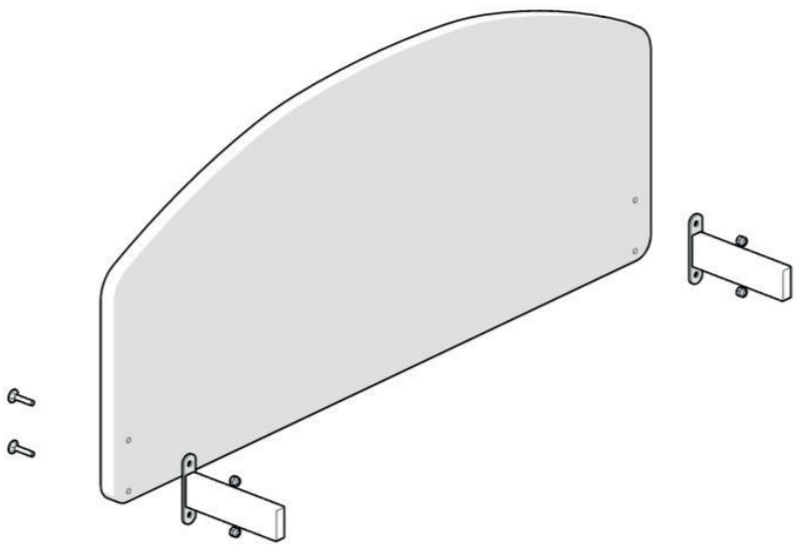

MATERIALS REQUIRED FOR ASSEMBLY



10 mm WRENCH - 1 x

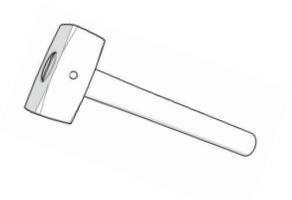

1 X

SUPPLIED MATERIALS

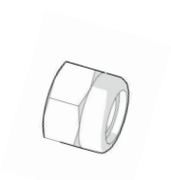

8 X

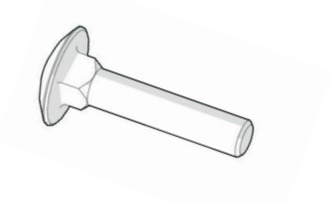

8 X

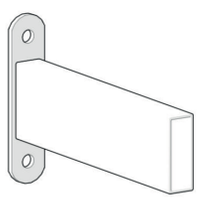

4 X

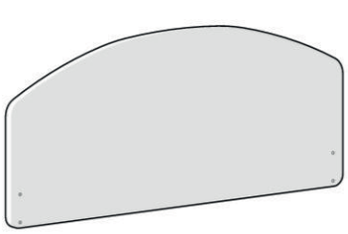

1 X

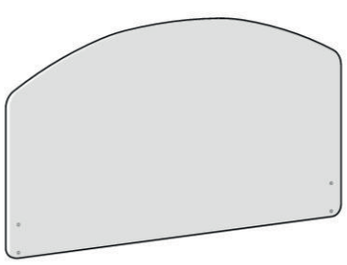

1 X

STEP 1

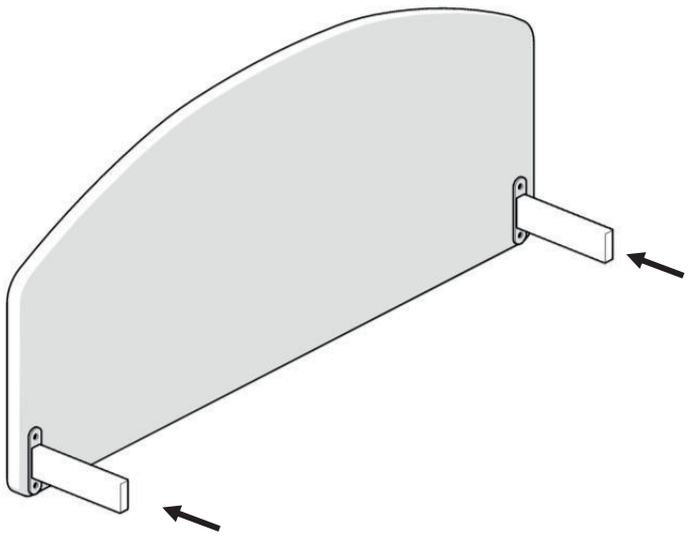

STEP 2

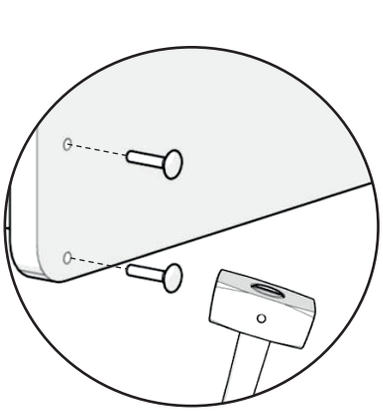

8 x

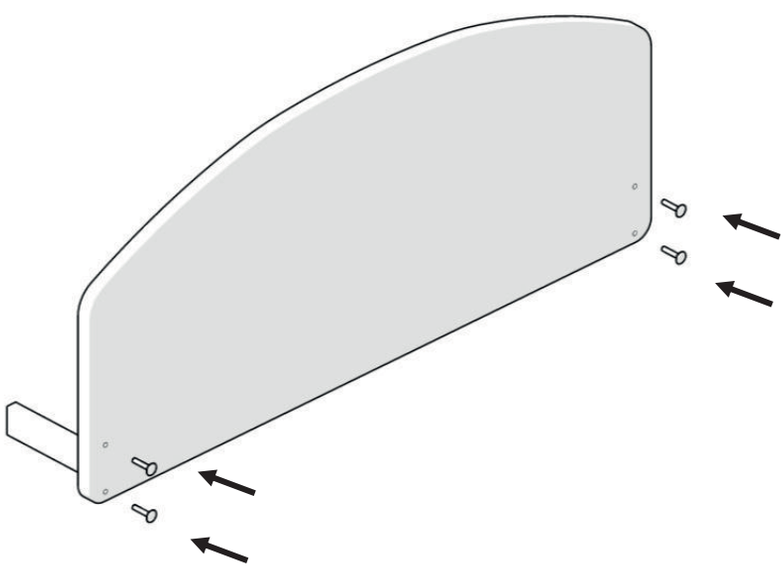

STEP 3

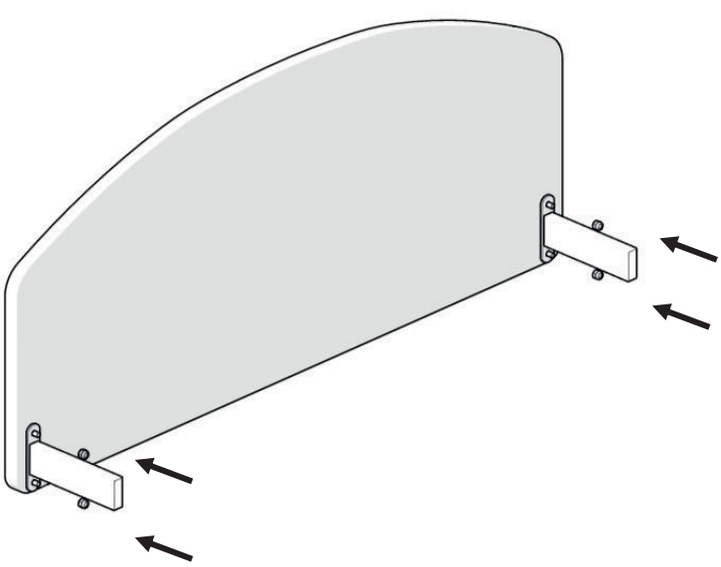

8 x

